Trefoil™
Engineering Consultants
Design | Build | Deliver

Product Brochure



Kansa-2

Twin Spin Foot Massager

A differentiated wellness product for a growing market.

Inspired by the traditional Kansa foot-massage practice, Kansa-2 combines two rotating Kansa massage surfaces with precision engineering. Made with solid cast Kansa and engineered in Maharashtra.

Engineered for a distinctive experience

The Kansa-2 Twin Spin Foot Massager is more than a conventional foot massager. It combines the heritage of Kansa, an engaging product experience and modern engineering in a distinctive Indian wellness product.

For distributors and retailers, it offers a strong product story that is easy to demonstrate and communicate to customers. For wellness businesses, it can become an additional service or experience within their existing offering.

Twin Spin Technology

Two rotating massage surfaces work together to provide a unique foot-massage experience.

Solid Cast Kansa

The massage surfaces use solid cast Kansa, making the traditional metal an important part of the product.

Comfortable Design

Designed for comfortable seated use with dedicated foot and leg support.

Easy Operation

Simple controls make Kansa-2 convenient to operate in personal and professional settings.

B2B Ready

A suitable addition to wellness centres, Ayurvedic businesses, retail portfolios, distribution networks and hospitality.

Made in India

Designed and manufactured in Maharashtra with Trefoil's engineering expertise.

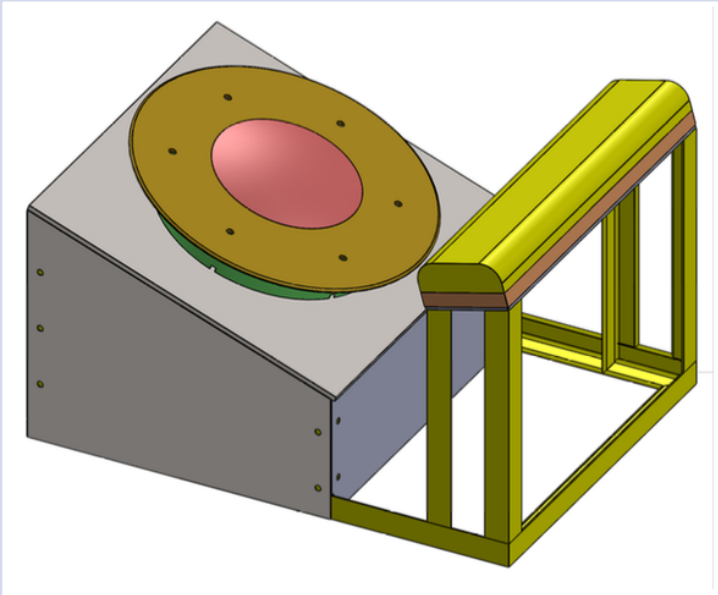

How the Twin Spin works

A geared motor sits inside a sturdy, covered stand with a pre-settable digital timer for each sitting.

A round Kansa disc, about 3 mm thick and 300 mm wide, rotates clockwise. At its centre, a solid spherical segment of Kansa rotates anti-clockwise, giving a reciprocating massage action.

A leg-locating stand is part of the machine. It is a very simple, slow-speed machine, handled as safely as a domestic appliance.

Benefits of Kansa massage

- **Relieves tiredness**
  Helps relax tired feet and reduce overall body fatigue.
- **Relaxes foot muscles**
  A soothing massage to the soles of your feet.
- **Helps reduce foot swelling**
  Helps relieve swelling in the feet.
- **Helps reduce cracked heels**
  Supports foot care by helping reduce cracks and dryness.
- **Promotes relaxation**
  Helps you feel relaxed and comfortable after a long day.
- **Supports better sleep**
  May help promote relaxation and improve sleep quality.
- **Relieves heel and knee discomfort**
  A relaxing foot massage that may help ease discomfort.
- **Helps relieve eye fatigue**
  Relief from eye tiredness is also mentioned in the leaflet.
- **Traditional Kansa massage**
  Uses a cast Kansa bronze metal plate for a traditional experience.

Technical details

Kansa disc	About 3 mm thick, 300 mm round; rotates clockwise
Kansa dome	Solid spherical segment at the centre; rotates anti-clockwise
Controls	Pre-settable digital timer for one sitting
Power supply	230 V, single phase, 50 Hz; can be made to suit the destination country
Power use	Less than one unit when run continuously for 8 hours
Size	Approx. 2 ft x 2 ft x 1.5 ft; floor space normally 3 ft x 6 ft
Control panel	Separate, wall-mountable; can be made integral to the frame on request
Duty cycle	10 minutes per person, then 2 to 4 minutes to clean disc and dome; motor rated for continuous duty
Supplied with	Control unit and leg-rest cushion; packed in one cardboard box suitable for air freight

+91 7977078846 | info@trefoilindia.com

Who we are?

Trefoil Engineering Consultants was founded by mechanical engineer Sanjay R. Desai on a simple observation: Indian manufacturers needed a partner who could take a requirement from a rough sketch to a running machine on the shop floor. Today the firm handles engineering drawings and 3D modelling, flexible packaging machinery, special purpose machines, automation, and reverse engineering of legacy equipment.

The same engineering discipline produced our best-known consumer product. The Kansa-2 Twin Spin Foot Massager takes the traditional kansya thali ritual and turns it into a patented machine that any household, clinic or wellness centre can run daily. Alongside machinery, Trefoil also runs a literary division that publishes the Budding children's career series and Marathi titles.



Trefoil™ Engineering Consultants
Design | Build | Deliver

Request a quote

Phone: +91 7977078846
Email: info@trefoilindia.com | contacttrefoilindia@gmail.com
Web: www.trefoilindia.com

Address

Sadafuli Bunglow, Nandivali Road,
R.G. Patil Wadi, Dombivli (East) - 421201,
Maharashtra, India.

Disclaimer: Kansa-2 is a therapeutic massager and not a replacement for a doctor or medical treatment. If symptoms persist for an extended period, please see a medical practitioner. The product shown is for reference only and the benefits cited may vary from person to person.